AUTHORIZED DISTRIBUTOR:
JARCO INDUSTRIES
TOLL FREE ORDERING 800-458-7578
WWW.CONCESSIONSTANDS.COM

Part No. 49217
Revised June 1996

6 oz. Kettle Poppers

with Love My Popper Kettle

Instruction Manual

Models #1871 & #2660

GOLD MEDAL®
FUNFOOD EQUIPMENT & SUPPLIES
Cincinnati, OH 45241-4807 USA

SAFETY PRECAUTIONS

⚠ CAUTION

This equipment is designed and sold for commercial use only. This equipment is not to be used by the consumer in home use. Do not allow direct contact of this equipment by the public when used in food service locations. Only personnel trained and experienced in the equipment operation may operate this equipment.
Carefully read all installation instructions before operating the equipment.

⚠ WARNING

Always wear safety glasses when servicing this equipment.

⚠ WARNING

To avoid serious burns, do NOT touch the kettle while it is hot.

⚠ WARNING

Any alterations to this equipment will void the warranty and may cause a dangerous situation. NEVER make alterations to the equipment.
Make sure all machine switches are in the OFF position before plugging the equipment into a receptacle.

⚠ DANGER

Machine must be properly grounded to prevent electrical shock to personnel.
Do NOT immerse the kettle, warmer, or any other part of this equipment in water.
Always unplug the equipment before cleaning or servicing.

NOTE

The information, specifications and illustrations contained in this manual represent the latest data available at time of publication. Right is reserved to make changes as required at the discretion of Gold Medal Products Company without notice.

INSTALLATION INSTRUCTIONS

INSTALLATION

Your new Gold Medal Six Ounce Kettle Popcorn Machine requires no additional assembly. Remove all packing material and tape before starting operation.

OPERATING INSTRUCTIONS

CONTROLS AND THEIR FUNCTIONS

There are three switches on the popper.

LIGHT AND WARMER SWITCH

Turns on the heat to the bottom corn pan and heat light.

KETTLE MOTOR SWITCH

Turns on the motor which drives kettle agitator shaft.

KETTLE HEAT SWITCH

Turns on the heat element

AMOUNT OF POPCORN AND OIL

Your new popper is equipped with a six ounce (177 ml) corn measure cup. We recommend flavored and colored coconut oil. Popcorn popped in coconut oil stays fresh longer. Coconut oil does not leave black deposits in your kettle like other oils.

Corn charge - 6 oz. (177 ml)
Oil charge - 1.6 to 2.0 oz. (60 ml)
Flavacol - 1 tablespoon (8 cc)

POPPING INSTRUCTIONS

1. Turn KETTLE HEAT and KETTLE MOTOR switch ON.
2. Make test pop with 3 kernels of corn and 1 oz. (30 ml) of oil.
3. Load pre-measured popcorn and oil pouch into kettle.
4. When corn has popped, dump kettle.
5. Repeat cycle starting with Item #3; always pop 3-5 batches for best popcorn.

CARE AND CLEANING

⚠ DANGER

Unplug your machine bofore cleaning glass panel and case. Never immerse the kettle in water. This will ruin the electrical components and automatically void the guarantee.

Each time you finish a series of poppings, wipe the outside of the kettle with a soft cloth to remove any oil drippage on the outside of the kettle. After you finish popping for the day, allow kettle to cool until it is not too hot to handle, but still warm. Unplug kettle and remove it from the machine. With a cloth, wipe out the inside of the kettle, kettle lid, crossbar, outside and underneath of the kettle.

Cleaning the cabinet of your machine is easy. Take a clean cloth and wipe excess grease from the glass. Wipe the outside of the machine also. **NOTE:** Never use a glass or plastic cleaner that contains ammonia. It will crack the plastic on the machine.

MAINTENANCE INSTRUCTIONS

⚠ CAUTION

THE FOLLOWING SECTIONS OF THIS MANUAL ARE INTENDED ONLY FOR QUALIFIED SERVICE PERSONNEL WHO ARE FAMILIAR WITH ELECTRICAL EQUIPMENT. THESE ARE NOT INTENDED FOR THE OPERATOR.

⚠ WARNING

Adequate eye protection must be used when servicing this equipment to prevent the possibility of injury.

⚠ DANGER

Do NOT immerse the kettle, warmer, or any other part of this equipment in water.
Unplug your machine before servicing.

ACCESSORIES

Description	Part Number
6 oz. Corn Measure Cup	49049
A-Scoop	47145
Small Plastic Flavacol Cup	47678
Small 2 oz. (¼ cup oil) Measure	

ORDERING SPARE PARTS

1. Identify the desired part by checking it against the photos, illustrations, and/or the parts list.
2. When ordering, please include part number, part name, and quantity desired.
3. Please include your model name and machine serial number (located on the machine nameplate) with your order.
4. Address all parts orders to:

Jarco Industries

order toll free 800-458-7578
or order online at www.concessionstands.com

6 oz. KETTLE POPPER CABINET ASSEMBLY

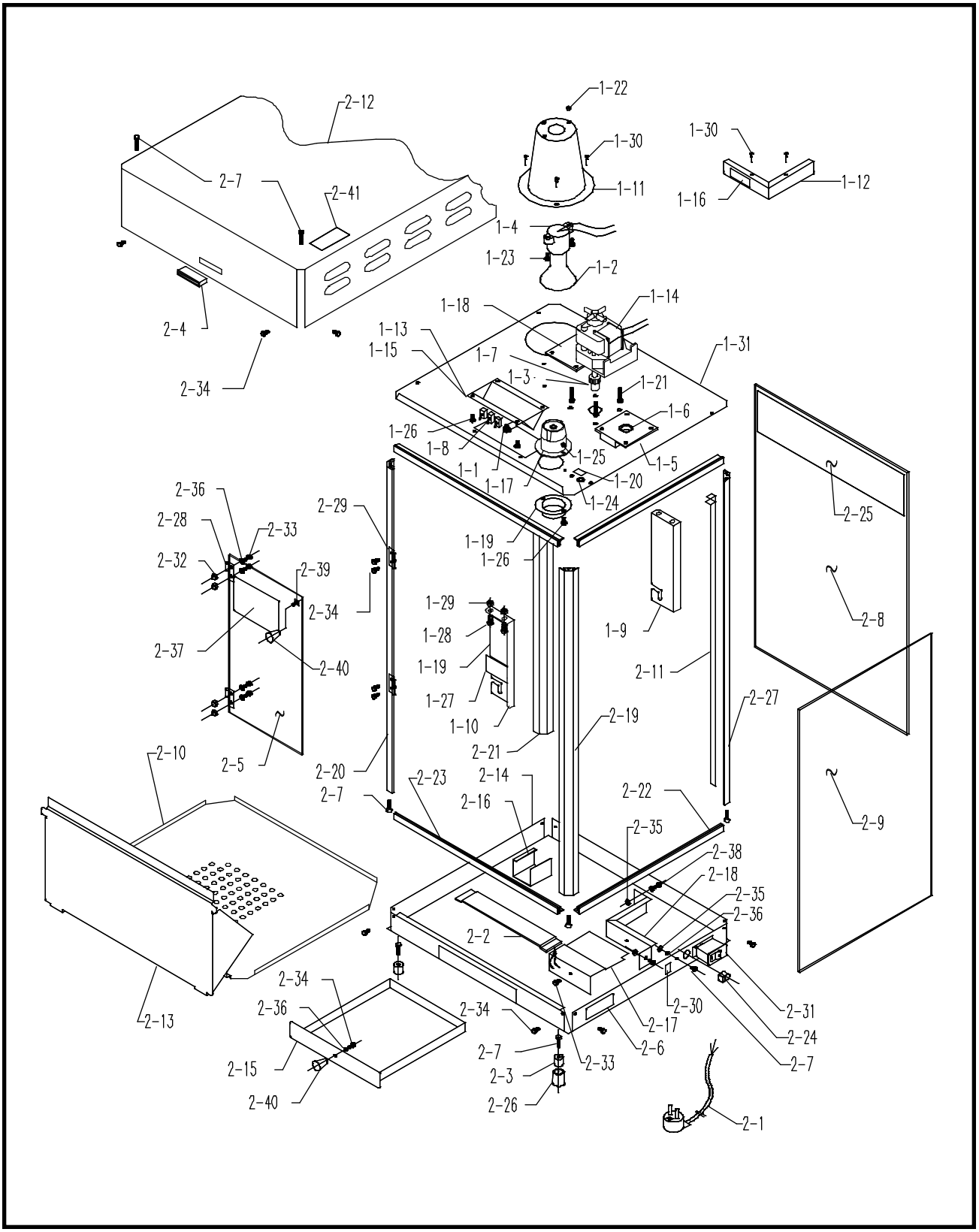

PARTS LIST - HANGER ASSEMBLY

Item No.	Part No.	Description
1-0	49337	Complete Hanger Assembly
1-1	41033	Pilot Light
1-2	41671	Reflector Flood Light
1-3	41742	Set Screw #10-32 x $^{3}/_{16}$"
1-4	47047	Lamp Holder
1-5	47065	Gear Box w/ Bushing
1-6	47058	Flange Bushing
1-7	47059	Spur Gear
1-8	47201	Switch
1-9	49010	Front Hanger Arm
1-10	49009	Rear Hanger Arm
1-11	49480	Light Shield
1-12	47799	Light Shield Angle
1-13	49099	Switch Box
1-14	47038	Kettle Drive Motor
1-15	49116	Label, Switches
1-16	41452	Warning, Max Lamp 75W
1-17	49330	Receptacle Assembly
	49341	Black Recept. Wire Assembly
	49342	White Recept. Wire Assembly
	49343	Green Recept. Wire Assembly
1-18	49484	Motor Spacer
1-19	49322	#10-24 x 1" Hex Machine Screw
1-20	74146	Hex Nut, #8-32 Eslok
1-21	89125	#8-32 x ¾" Hex Head
1-22	74150	Washer, #8 Internal Tooth
1-23	74149	Hex Nut, #8-32
1-24	74141	Screw, #8-32 x $^{3}/_{8}$" Panhead Phillips
1-25	87087	Label, Caution Hot
1-26	14821	Bolt ¼-20 x ½" Hex HD
1-27	74133	Hex Nut
1-28	47001	Pop Rivet
1-29	49331	Motor Plate

PARTS LIST - CABINET ASSEMBLY

Model #1871 Series

Item No.	Model #1871 Part No.	Model #1871SS Part No.	Model #1871PS Part No.	Description
2-0	49252	49242	49281	Cabinet Assembly
2-1	22038	22038	22038	Lead-In Cord
2-2	40031	40031	40031	Heat Element 120V, 50W
2-3	41349	41349	41349	Male Hinge, Short Right
2-4	41351	41351	41351	Female Hinge, Long Right
2-5	47120	47120	47120	Knob, Lid Lift
2-6	87179	87179	87179	Glide
2-7	47561	47561	47561	Magnetic Catch
2-8	49100	49100	49100	Old Maid Pan
2-9	49103	49103	49103	Strip Heater Bracket
2-10	49123	49123	49123	Crutch Tip
2-11	77506	77506	49295	Decal, Front Glass
2-12	49333	49333	49333	Top Frame Assembly
2-13	49247	77016	77016	Front Corner Post
2-14	49347	49257	49257	Right Rear Corner Post
2-15	49348	49258	49258	Left Rear Corner Post
2-16	49345	49345	49345	Bottom Frame Assembly
2-17	49456	49456	49465	Dome
2-18	49207	49259	49237	Door
		49260		Door
2-19	49208	49255	49239	Front Glass, 1/8" x 15 1/8" x 22 ½"
2-20	49209	49236	49236	Side Glass, 1/8" x 13 1/8" x 22 ½"
2-21	49210	49265	49210	Drop Panel
2-22	49211	49211	49229	Corn Pan
2-23	76190	76190	76190	Screw, #10-24 x ¾" Hex
2-24	77089	77089	77089	Mount Bracket, Magnetic Catch
2-25	76026	76026	76026	Strain Relief
2-26	49201	49201	49201	Wiring Guard
2-27	75267	75267	75267	Tee Bolt
2-28	47702	47702	47702	#8-32 Acorn Nut
2-29	74142	74142	74142	#8-32 x ¼" Panhead Phillips
2-30	74141	74141	74141	#8-32 x 3/8" Panhead Phillips
2-31	74149	74149	74149	#8-32 Hex Nut
2-32	87149	87149	87149	Label, Disconnect Power
2-33	47663	47663	47663	Label, 6 Steps To Better Popping
2-34	49322	49322	49322	#10-24 x 1" Hex Hd Machine Screw
2-35	49212			Rigid Channel, 22 1/8"
2-36	49213	49213	49213	Rigid Channel, 13 1/8"
2-37	49214		49214	Rigid Channel, 15 1/8"
2-38	76097	76097	76097	Label, Unplug Before Cleaning
2-39	49486	49486	49486	Washer
2-40	74153	74153	74153	#8-32 x 1" Hex HD
2-41	49215	77525	77525	Rear Glass Retainer Strip
2-42	49216	77526	77526	Front Glass Retainer Strip
2-43	41350	41350	41350	Male Hinge, Short Left
2-44	41352	41352	41352	Female Hinge, Long Left

PARTS LIST - CABINET ASSEMBLY

Model #2660 Series

Item No.	Model #2660 Part No.	Model #2660PS Part No.	Model #2660SS Part No.	Model #2660BL Part No.	Model #2660GT Part No.	Description
2-0	49026	49256	49227	49206BL	49374	Cabinet Assembly
2-1	22038	22038	22038	22038	22038	Lead-In Cord
2-2	40031	40031	40031	40031	40031	Heat Element 120V, 50W
2-3	41349	41349	41349	41349	41349	Male Hinge, Short Right
2-4	41351	41351	41351	41351	41351	Female Hinge, Long Right
2-5	47120	47120	47120	47120	47120	Knob, Lid Lift
2-6	87179	87179	87179	87179	87179	Glide
2-7	47561	47561	47561	47561	47561	Magnetic Catch
2-8	49100	49100	49100	49100	49100	Old Maid Pan
2-9	49103	49103	49103	49103	49103	Strip Heater Bracket
2-10	49123	49123	49123	49123	49123	Crutch Tip
2-11	49158	49263	49158	49297		Decal, Front Glass
2-12	49332	49332	49332	49332	49375	Top Frame Assembly
2-13	49346	49351	49351	49346	49405	Front Corner Post
2-14	49347	49257	49257	49347	49410	Right Rear Corner Post
2-15	49348	49258	49258	49348	49406	Left Rear Corner Post
2-16	49345	49345	49345	49345	49406	Bottom Frame Assembly
2-17	49456	49456	49465	49457		Dome
2-18	49207	49259	49237	49207	49207	Door
		49260				Door
2-19	49208	49255	49239	49208	49427	Front Glass $^1/_8$" x 15 $^1/_8$" x 22 ½"
2-20	49209	49236	49236	49209	49426	Side Glass $^1/_8$" x 13 $^1/_8$" x 22 ½"
2-21	49210	49265	49210	49210	49210	Drop Panel
2-22	49211	49211	49229	49211	49211	Corn Pan
2-23	76190	76190	76190	76190	76190	Screw #10-24 x $^3/_4$" Hex
2-24	77089	77089	77089	77089	77089	Mount Bracket, Magnetic Catch
2-25	76026	76026	76026	76026	76026	Strain Relief
2-26	49201	49201	49201	49201	49201	Wiring Guard
2-27	75267	75267	75267	75267	75267	Tee Bolt
2-28	47702	47702	47702	47702	47702	#8-32 Acorn Nut
2-29	74142	74142	74142	74142	74142	#8-32 x ¼" Panhead Phillips
2-30	74141	74141	74141	74141	74141	#8-32 x $^3/_8$" Panhead Phillips
2-31	74149	74149	74149	74149	74149	#8-32 Hex Nut
2-32	87149	87149	87149	87149	87149	Label, Disconnect Power
2-33	47663	47663	47663	47663	47663	Label, 6 Steps To Better Popping
2-34	49322	49322	49322	49322	49322	#10-24 x 1" Hex Hd Machine Screw
2-35	49212			49212	49212	Rigid Channel, 22 $^1/_8$"
2-36	49213	49213	49213	49213	49213	Rigid Channel, 13 $^1/_8$"
2-37	49214	49214	49214	49214	49214	Rigid Channel, 15 $^1/_8$"
2-38	76097	76097	76097	76097	76097	Label, Unplug Before Cleaning
2-39	49486	49486	49486	49486	49486	Washer
2-40	74153	74153	74153	74153	74153	#8-32 x 1" Hex HD
2-41	49215	49215		49215	49215	Rear Glass Retainer Strip
2-42	49216	49216		49216	49216	Front Glass Retainer Strip
2-43	41350	41350	41350	41350	41350	Male Hinge, Short Left
2-44	41352	41352	41352	41352	41352	Female Hinge, Long Left

6 oz. KETTLE ASSEMBLY

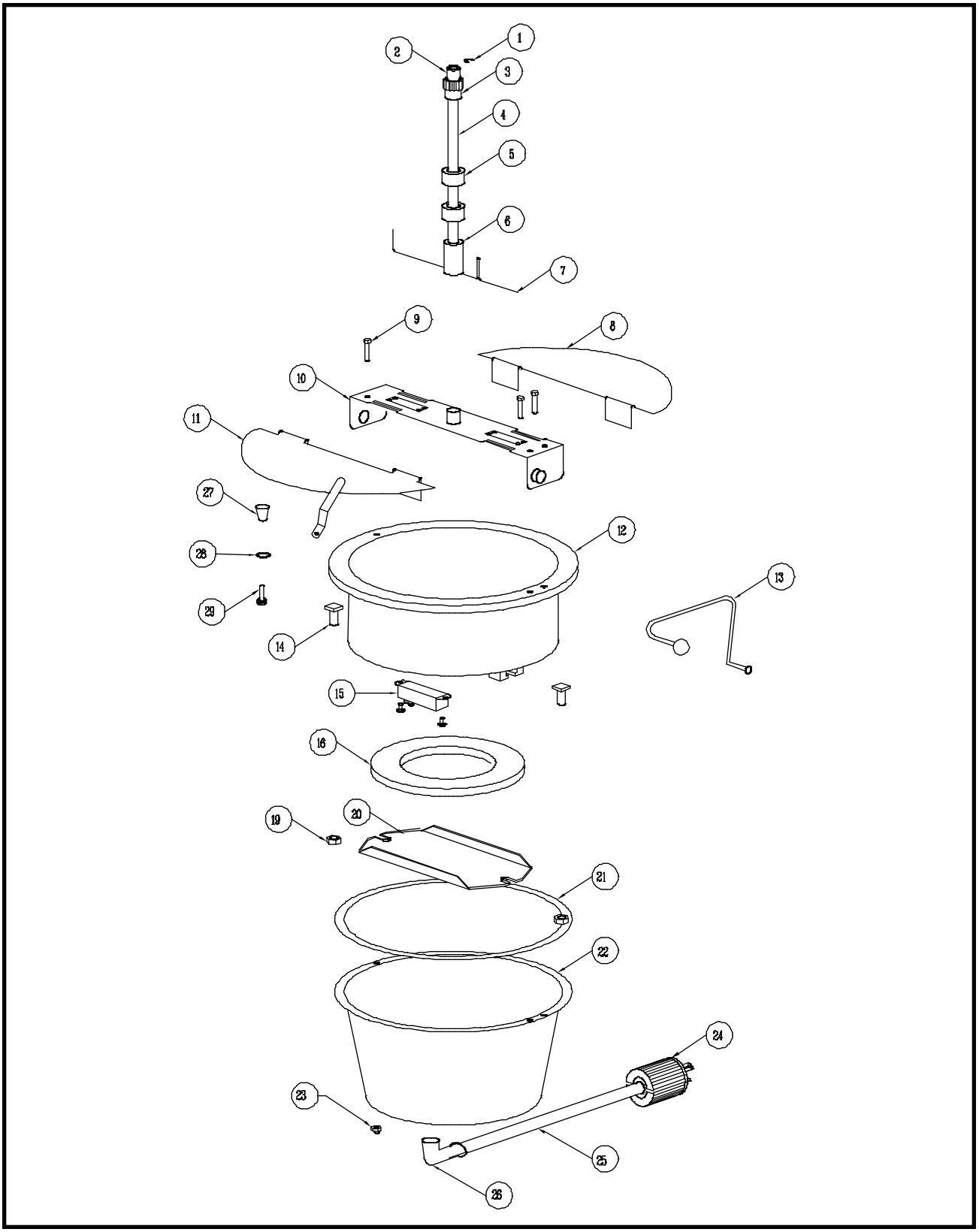

PARTS LIST - 6 oz. KETTLE ASSEMBLY

Item No.	Part No.	Description
	49434	6 oz. Kettle Complete
1	47107	C - Ring
2	47106	Needle Bearing
3	47059	Spur Gear
4	49423	Agitator Shaft Assembly
5	46649	Set Collar
6	49013	Agitator Weight
7	49011	Stir Rod
8	49016	Rear Kettle Lid
9	89125	Screw #8-32 x ¾" Hex HD
10	49471	Crossbar Assembly
11	49017	Front Lid with Lifter
12	49432	Kettle Welded Assembly
13	49314	Dump Handle R.H.
14	49446	Bolt, $^{5}/_{16}$-18 x $^{5}/_{8}$" Square HD
15	49474	Secondary Thermostat
16	49081	Heat Element, 1000W
17	47676	Primary Thermostat
18	49136	Screw, #6-32 x $^{3}/_{16}$" Pan HD MS
19	49317	$^{5}/_{16}$-18 Serrated Lock Nut
20	49310	Element Retainer Bracket
21	49368	Kettle Gasket
22	49431	Kettle Shell
23	47702	Acorn Nut #8-32
24	49329	Kettle Plug
25	77079-16	Flexible Conduit
26	46241	90 Degree Connector
	49328	Kettle Lead-In Cord Assembly
27	47120	Knob, Lid Lifter
28	74150	#8 Lock Washer
29	87210	Screw, #8-32 x $^{3}/_{8}$"
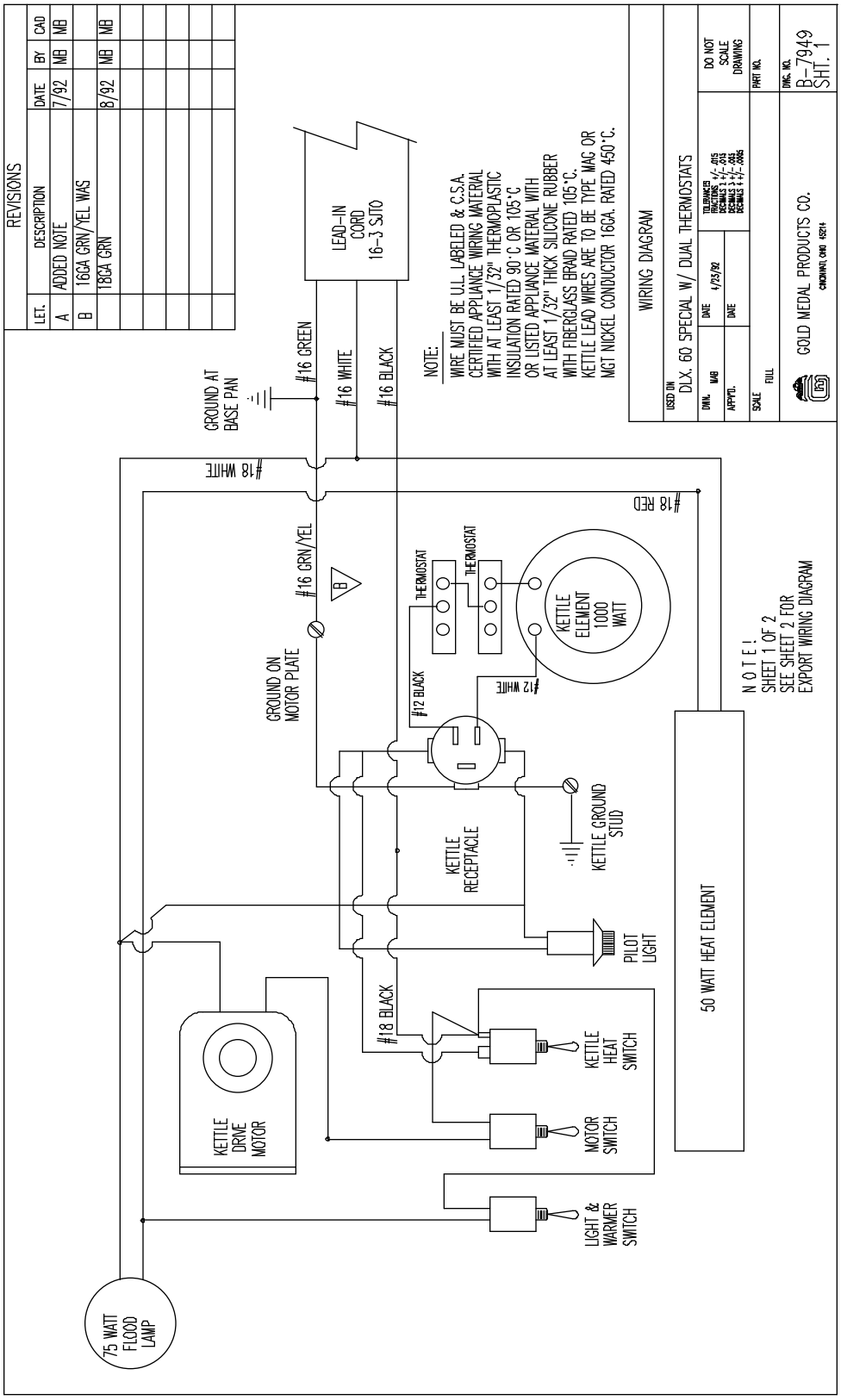
ELECTRICAL SCHEMATIC